ALTERED ITEM NOTES:
1. THIS IS A PART MANUFACTURED BY ANOTHER VENDOR (DETAILS BELOW). THE DIMENSIONS SHOWN IN THIS DRAWING ARE REQUIRED MODIFICATIONS.
2. ALL REFERENCE/INSPECTION DIMENSIONS SHALL BE VERIFIED PRIOR TO ALTERATIONS.
3. ALTERED ITEM VENDOR: **MCMASTER CARR**
4. ALTERED ITEM PART NUMBER: **90327A138**
5. ALTERED ITEM DESCRIPTION: **Low-Profile Socket Head Cap Screw M6 x 20**

REVISION HISTORY				
ZONE	REV	DESCRIPTION	DATE	APPROVED
	-	INITIAL RELEASE	10/23/14	arnoldj

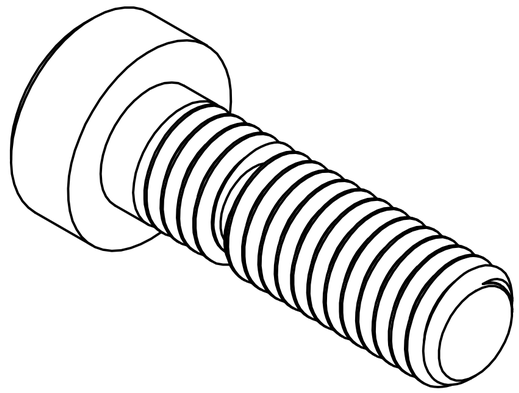

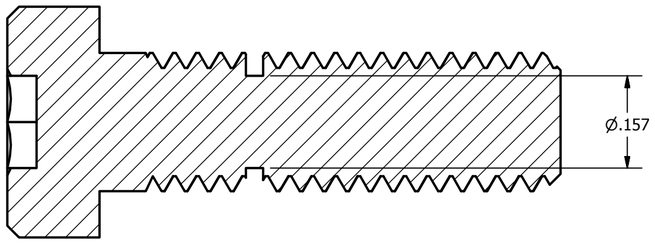

SECTION A-A

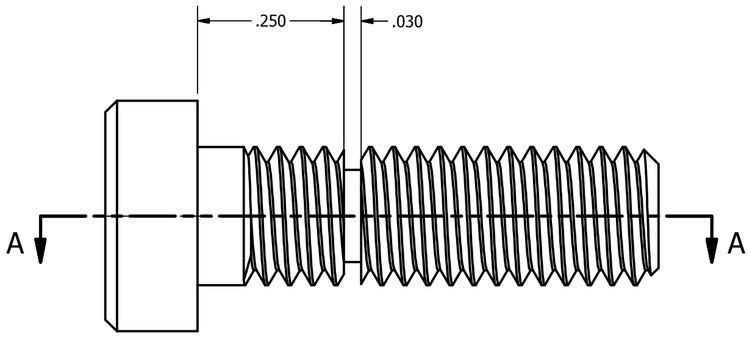

NOTICE:
INFORMATION CONTAINED IN THIS DOCUMENT OR ANY REPRODUCTION THEREOF, IS PROPRIETARY INFORMATION AND PROPERTY OF HOWARD HUGHES MEDICAL INSTITUTE. IT SHALL NOT BE DISCLOSED, COPIED, DUPLICATED OR USED FOR MANUFACTURE, PRODUCTION OR PROCUREMENT, WITHOUT THE EXPRESS WRITTEN PERMISSION OF HOWARD HUGHES MEDICAL INSTITUTE.

(UNLESS SPECIFIED OTHERWISE)
PRIMARY UNITS: INCHES
[SECONDARY UNITS]: MILLIMETERS

PRIMARY TOLERANCES:	
X.X	± 0.020
X.XX	± 0.010
X.XXX	± 0.005
X.XXXX	± 0.0005
ANGULAR	± 0.5 DEG

- DO NOT SCALE DRAWING -

THIRD ANGLE PROJECTION:

HHMI
HOWARD HUGHES MEDICAL INSTITUTE

HHMI janelia farm research campus

MPS Adjuster Screw.ipt

SIZE	PART NUMBER	REV	SHEET
C	J002885	-	1 OF 1